Wiring Diagram

Typical Wiring Diagram - Make-Up Air Unit

C000509

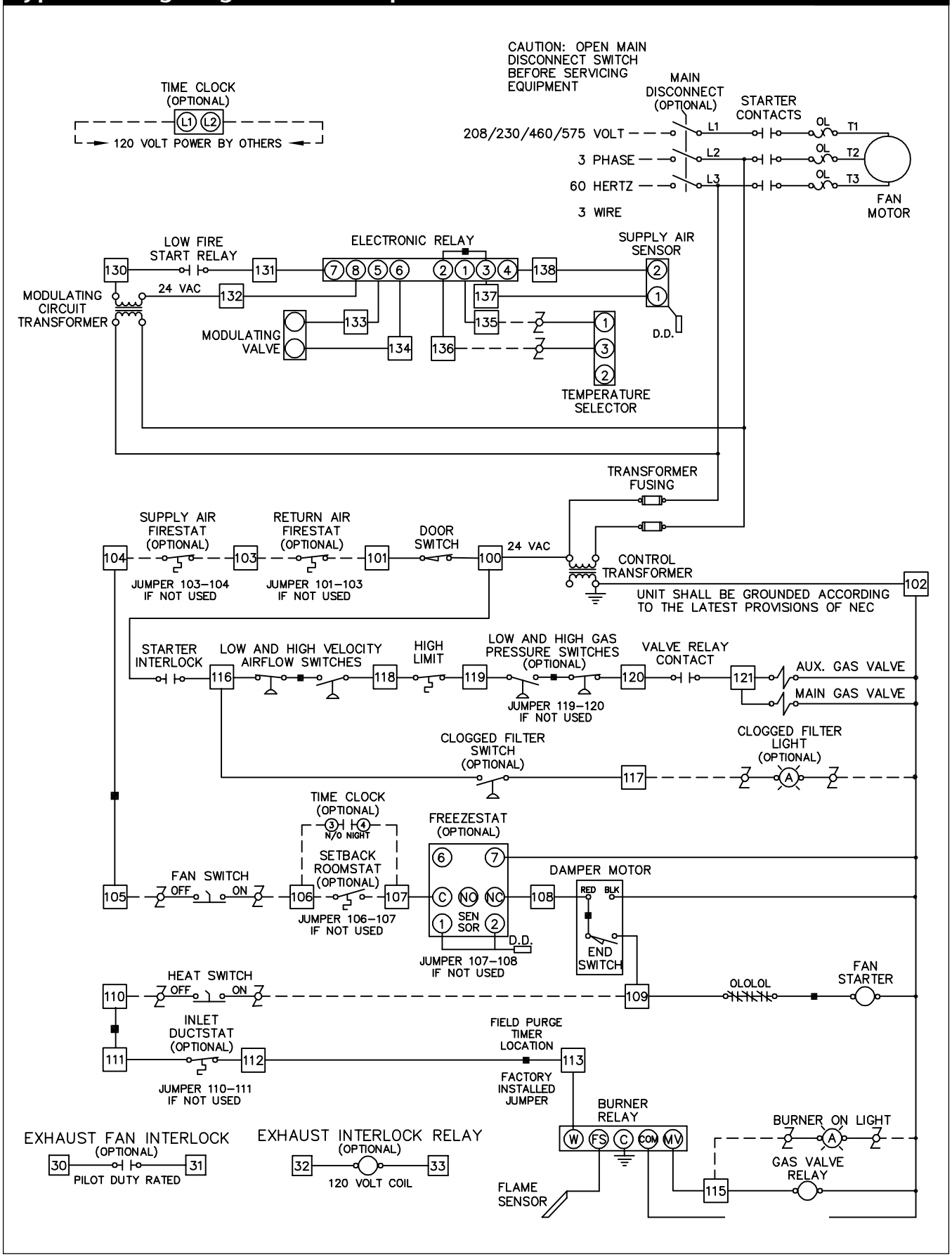

Wiring Diagram

Typical Wiring Diagram - Return Air Unit

C000546

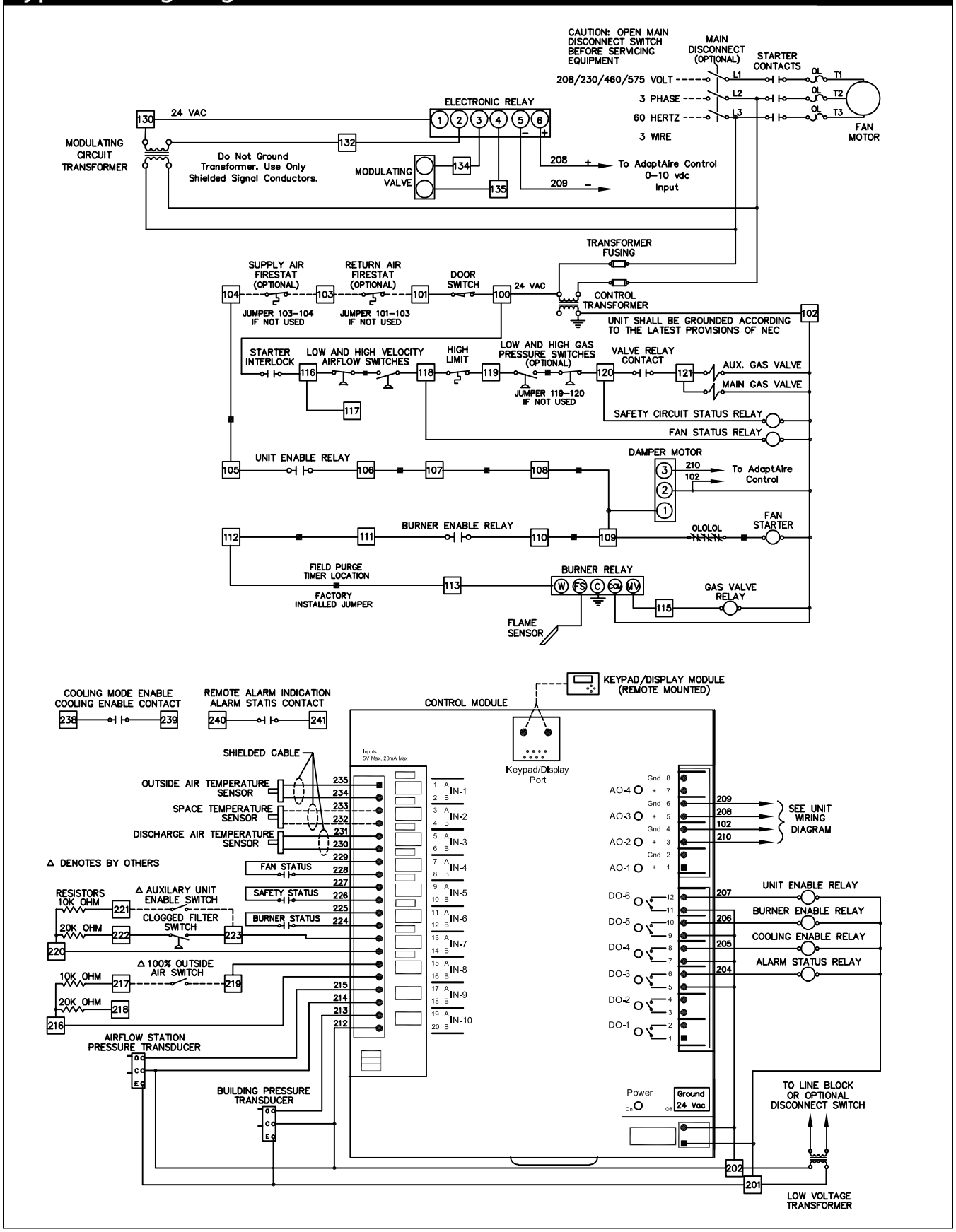

NOTE: *DDC Control package includes burner control with room temperature sensor and high and low discharge limits, keypad and display for remote control capabilities, inlet on-off ductstat, electronic time clock, on-off night set back thermostat and timed freeze protection.*